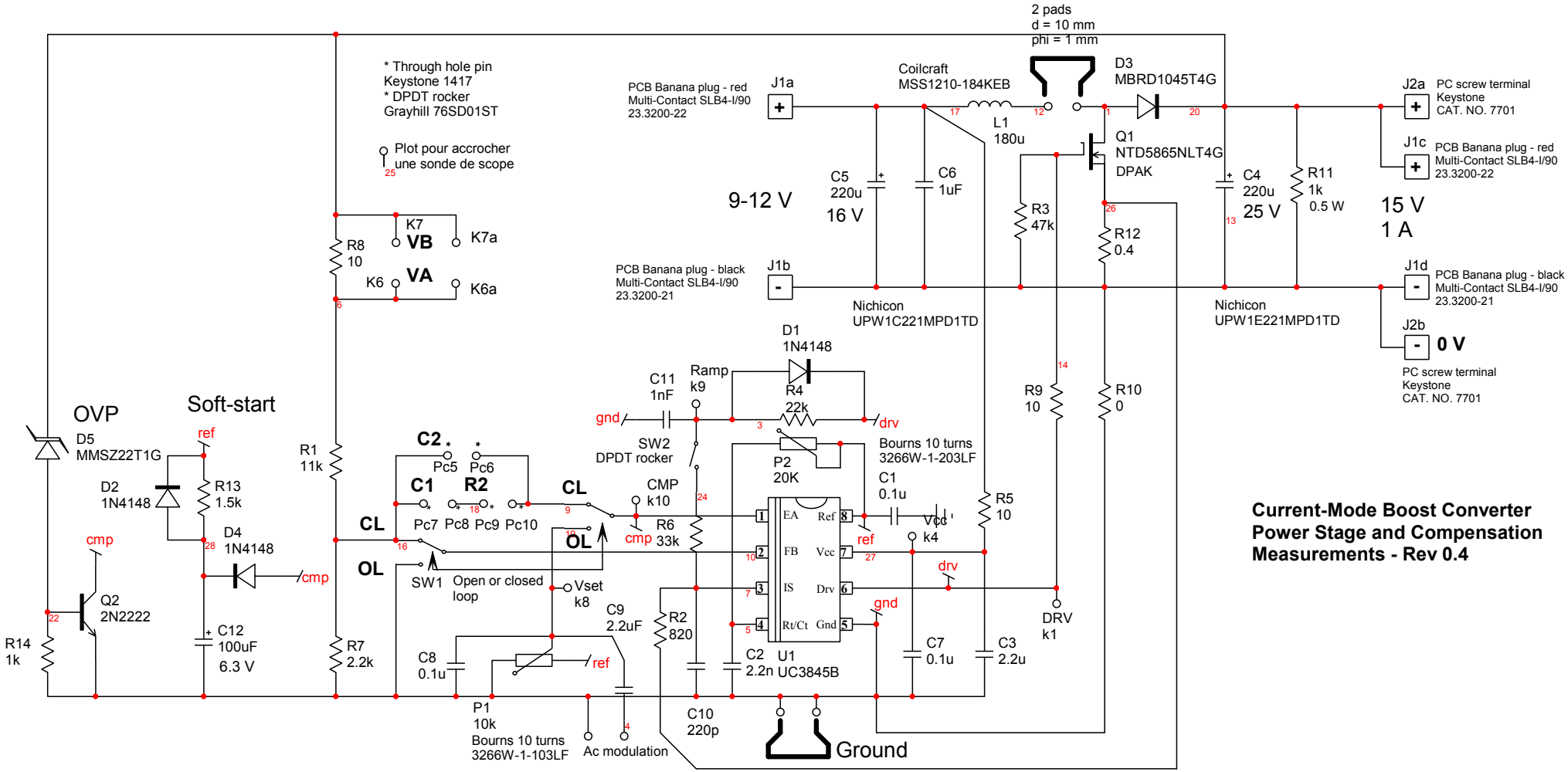

Current-Mode Boost Converter Power Stage and Compensation Measurements - Rev 0.4